Work Order ID 73464

Thursday, September 01, 2011 7:36:37 AM

Item ID: D3204-3
Revision ID:
Item Name: Arm

Accept **Setup** **Start** **Stop**

Start Date: 8/31/2011 **Start Qty:** 4.00
Required Date: 9/16/2011 **Req'd Qty:** 4.00
Reference:

Cust Item ID:
Customer:

Approvals: **Process Plan:** CL **Date:** 11/09/01 **Tooling:** _____ **Date:** _____
QC: _____ **Date:** _____ **SPC (Y/N):** _____ **Date:** _____

Run **Start** **Stop**

Sequence ID/ Work Center ID	Operation Description	Set Up/ Run Hours	Tool ID	Tool #	Plan Code	Accept Qty	Reject Qty	Reject Number	Insp. Stamp
Draw Nbr	**Revision Nbr**								
D3204	Rev A1								
100		0.00							
Bandsaw	BAND SAW					4	ϕ		
	Memo	0.00							
Jeaspa Bandsaw	Cut blank: 2.00" x 0.50" x 6.520" long Bar (+0.030/-0.000)								
110		0.00							
HAAS 1	HAAS CNC VERTICAL MACHINING #1					4			
	Memo	0.00							
HAAS CNC vertical machine #1	1- Machine as per Folio FA344 and Dwg D3204□2- Deburr□Identify as D3204-3								
120	QC2- Inspect parts off machine FAI/FAIB	0.00				4			
QC	**Memo**	0.00							
Quality Control									

B.A 11/09/23

RR 11.9.23

RR 11.9.23

Dart Aerospace Ltd

W/O:		WORK ORDER CHANGES					
DATE	STEP	PROCEDURE CHANGE	By	Date	Qty	Approval Chief Eng / Prod Mgr	Approval QC Inspector

Part No: _____ **PAR #:** _____ **Fault Category:** _____ **NCR:** Yes No **DQA:** _____ **Date:** _____

Resolution: _____ **Disposition:** _____ **QA: N/C Closed:** _____ **Date:** _____

NCR:		WORK ORDER NON-CONFORMANCE (NCR)						
DATE	STEP	Description of NC Section A	Corrective Action Section B			Verification Section C	Approval Chief Eng	Approval QC Inspector
			Initial Chief Eng	Action Description Chief Eng	Sign & Date			

NOTE: Date & initial all entries

H:\fFORMS\Quality Assurance\approved QA\NCRWO RevE

Work Order ID 73464

Thursday, September 01, 2011 7:36:37 AM

Item ID: D3204-3
Revision ID:
Item Name: Arm
Start Date: 8/31/2011 **Start Qty:** 4.00
Required Date: 9/16/2011 **Req'd Qty:** 4.00
Reference:

Accept

Setup **Start**
Stop

Cust Item ID:
Customer:

Run **Start**
Stop

Approvals: **Process Plan:** _____ **Date:** _____ **Tooling:** _____ **Date:** _____
QC: _____ **Date:** _____ **SPC (Y/N):** _____ **Date:** _____

Sequence ID/ Work Center ID	Operation Description	Set Up/ Run Hours	Tool ID	Tool #	Plan Code	Accept Qty	Reject Qty	Reject Number	Insp. Stamp
130	QC8- Inspect parts - second check	0.00							
QC	Memo	0.00				4	0		
Quality Control									
140	Identify as per dwg & Stock Location UA	0.00							
Packaging	Memo	0.00				11/9/26			
Packaging									
150	QC21- Final Inspection - Work Order Release	0.00							
QC	Memo	0.00						11/9/27	
Quality Control									

MF 11-09-26

Dart Aerospace Ltd

W/O:		WORK ORDER CHANGES					
DATE	STEP	PROCEDURE CHANGE	By	Date	Qty	Approval Chief Eng / Prod Mgr	Approval QC Inspector

Part No: _____ **PAR #:** _____ **Fault Category:** _____ **NCR:** Yes No **DQA:** _____ **Date:** _____

Resolution: _____ **Disposition:** _____ **QA: N/C Closed:** _____ **Date:** _____

NCR:		WORK ORDER NON-CONFORMANCE (NCR)						
DATE	STEP	Description of NC Section A	Corrective Action Section B			Verification Section C	Approval Chief Eng	Approval QC Inspector
			Initial Chief Eng	Action Description Chief Eng	Sign & Date			

NOTE: Date & initial all entries

H:\f\FORMS\Quality Assurance\approved QA\NCRWO RevE

Picklist Print

Thursday, September 01, 2011 7:36:35 AM

Work Order ID: 73464

Parent Item: D3204-3

Parent Item Name: Arm

Start Date: 8/31/2011 **Required Date:** 9/16/2011

Start Qty: 4.00 **Required Qty:** 4.00

Comments: IPP: □C□05.08.11□Added Step 25□ KJ/JLM□

Component Item ID/ Item Name	Replacement Item ID	Mfg/ Purch	Bin Item	Primary Location	Last Location	Route Seq ID	Unit of Measure	Qty on Hand	Qty per Kit	Total Qty	Qty Issued	Date Issued	Status
M6061T6B0.500X02.00 0		Purchased	No			100	f	18.5000	0.5538	2.331789			
6061-T6 Bar .500 x 2.00													

Location	Loc Qty	Loc Code
MAT002	18.5	
114488	18.5	

2.3317 ft DA 11/09/23

Dart Aerospace Ltd

W/O:		WORK ORDER CHANGES					
DATE	STEP	PROCEDURE CHANGE	By	Date	Qty	Approval Chief Eng / Prod Mgr	Approval QC Inspector

Part No: _____ **PAR #:** _____ **Fault Category:** _____ **NCR:** Yes No **DQA:** _____ **Date:** _____

Resolution: _____ **Disposition:** _____ **QA: N/C Closed:** _____ **Date:** _____

NCR:		WORK ORDER NON-CONFORMANCE (NCR)						
DATE	STEP	Description of NC Section A	Corrective Action Section B			Verification Section C	Approval Chief Eng	Approval QC Inspector
			Initial Chief Eng	Action Description Chief Eng	Sign & Date			

NOTE: Date & initial all entries

H:\fFORMS\Quality Assurance\approved QA\NCRWO RevE

DESIGN	DRAWN BY	DART AEROSPACE LTD HAWKESBURY, ONTARIO, CANADA	
CHECKED	APPROVED	DRAWING NO. D3204	REV. A SHEET 1 OF 3
DATE 04.01.27		TITLE RELEASE PEDAL ASSEMBLY	SCALE NTS

A	04.01.27	NEW ISSUE
A1	05.07.15	6.45 WAS 6.50

RELEASED 04.04.30

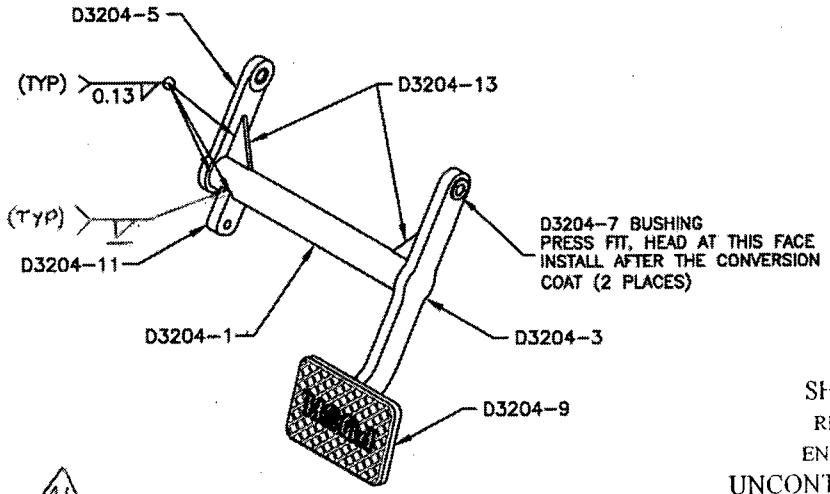

SHOP COPY
RETURN TO
ENGINEERING
UNCONTROLLED COPY
SUBJECT TO AMENDMENT
WITHOUT NOTICE
WORK ORDER
NO. 73464

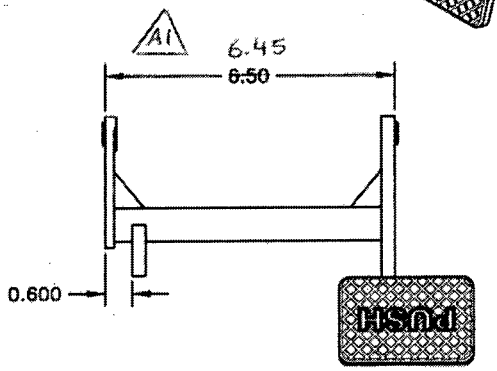

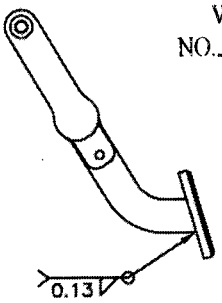

D3204-041 RELEASE PEDAL ASSEMBLY

NOTES
1) BREAK ALL SHARP EDGES 0.005 TO 0.015
2) MATERIAL: 6061-T6 OR -T62 (QQ-A-200/8) 0.750 OD x 0.125 WALL (M6061T6T0.75W.125)
3) MATERIAL: 6061-T6 (QQ-A-200/8 OR QQ-A-250/11 OR QQ-A-225/8) BAR (M6061T6B)
4) MATERIAL: AISI 303 SS (M303R)
5) MATERIAL: 6061 (QQ-A-250/11) SHEET 0.125 THICK (M6061T6S.125)
6) ENGRAVE "PUSH" USING 0.5" HIGH LETTERS TO DEPTH OF 0.010 TO 0.020
   ENGRAVE DART P/N USING 0.125 LETTERS TO MAX DEPTH OF 0.010
7) WELD ASSEMBLY PER QSI 004
8) CHEMICAL CONVERSION COAT PER DART QSI 005 4.1
9) POWDER COAT ASSEMBLY GREY SANDTEX (REF. 4.3.5.6) PER QSI 005 4.3
10) TOLERANCES ARE PER DART QSI 018 UNLESS OTHERWISE NOTED
11) ALL DIMENSIONS ARE INCHES

DESIGN	DRAWN BY	DART AEROSPACE LTD HAWKESBURY, ONTARIO, CANADA	
CHECKED	APPROVED	DRAWING NO. D3204	REV. A SHEET 2 OF 3
DATE 04.01.27		TITLE RELEASE PEDAL ASSEMBLY	SCALE NTS

RELEASED
04.04.05

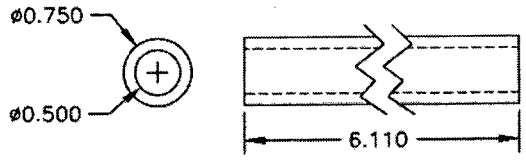

2 D3204–1 TUBE
SCALE 1:2

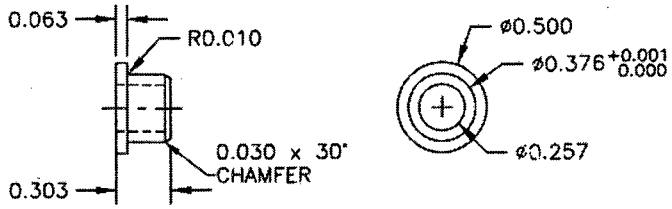

4 D3204–7 BUSHING
SCALE 1:1

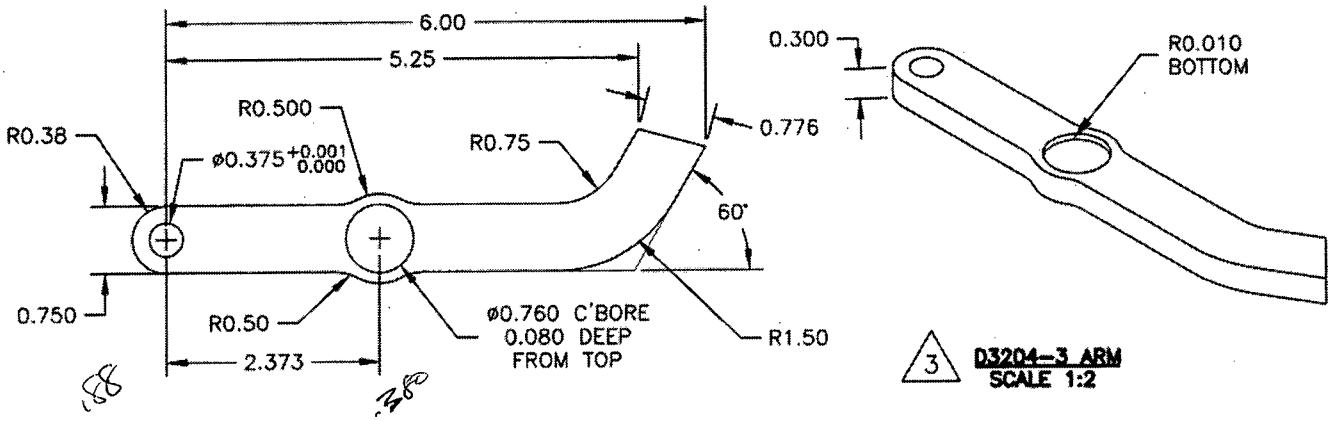

3 D3204–3 ARM
SCALE 1:2

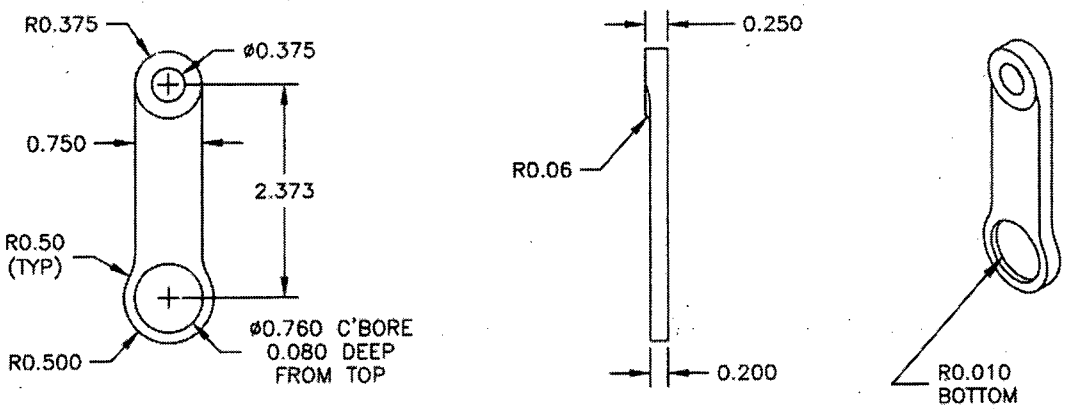

3 D3204–5 ARM
SCALE 1:2

6.870

DESIGN	DRAWN BY	DART AEROSPACE LTD HAWKESBURY, ONTARIO, CANADA	
CHECKED	APPROVED	DRAWING NO. D3204	REV. A SHEET 3 OF 3
DATE 04.01.27		TITLE RELEASE PEDAL ASSEMBLY	SCALE NTS

RELEASED 04.04.30

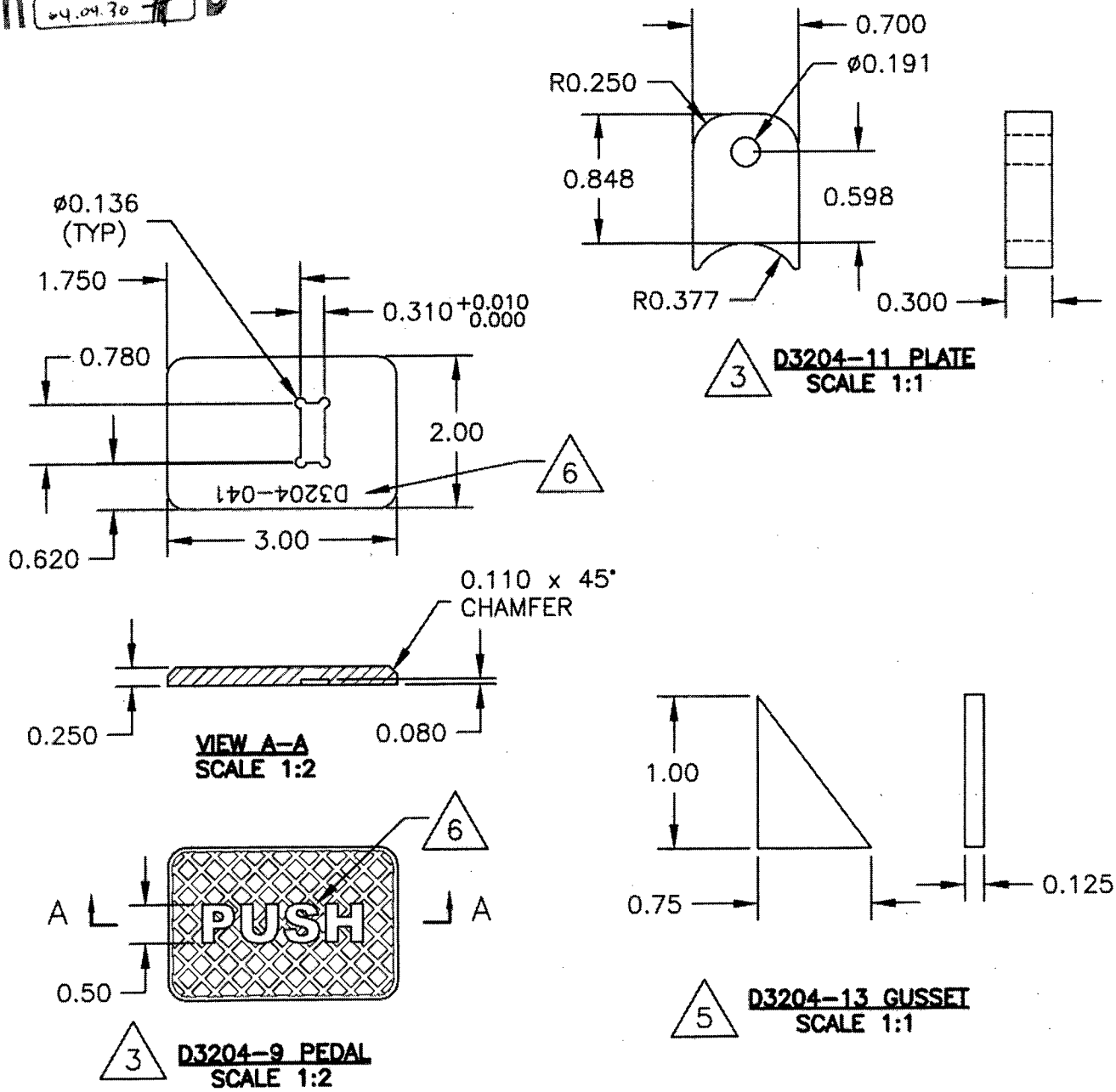

DART AEROSPACE LTD	Work Order:	73469
Description: Arm	Part Number:	D3204-3
Inspection Dwg: D3204 **Rev:** A1		Page 1 of 1

FIRST ARTICLE INSPECTION CHECKLIST

[X] First Article [ ] Prototype

Drawing Dimension	Tolerance	Actual Dimension	Accept	Reject	Method of Inspection	Comments
6.00	+/-0.030	5.995	✓		2Q-2	
5.25	+/-0.030	5.250	✓			
0.776	+/-0.010	.780	✓	X		
Ø0.760	+0.005/-0.000	.760	✓			
0.080	+/-0.010	.081	✓			
R0.50	+/-0.010	R.50	✓			
2.373	+/-0.010	2.373	✓			
0.750	+/-0.010	.752	✓			
R0.380	+/-0.010	R.380	✓			
Ø0.375	+0.001/-0.000	.376	✓			
0.300	+/-0.010	.302	✓			

Measured by:	[illegible]	Audited by:	[illegible]	Prototype Approval:	N/A
Date:	11.9.23	Date:	11/09/26	Date:	N/A

Rev	Date	Change	Revised by	Approved
A	05.02.17	New Issue	KJ/JLM	
B	06.03.21	Dwg Rev update	KJ/JLM	